Pallet Conveyor - 103mm Pitch

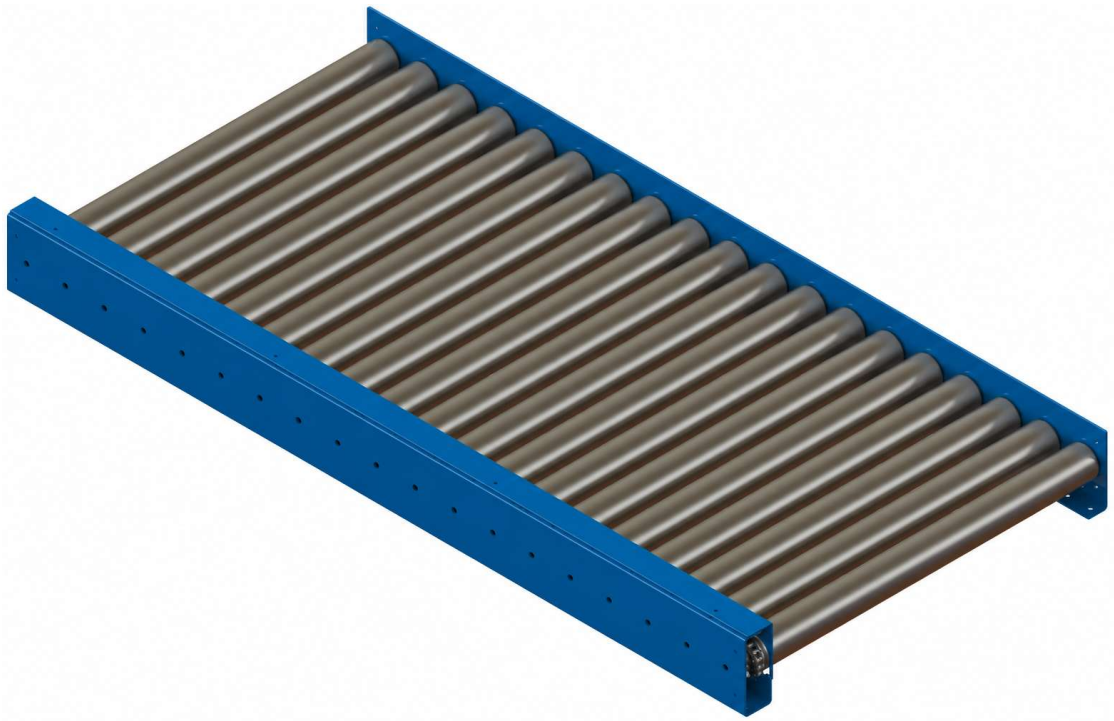

Product overview

- The conveyor side frames are formed in 5mm mild steel with the drive side 50mm above the roller, and the bearing side either 50mm above or 10mm below the rollers.
- Ø80 BZP rollers (also available in stainless and with flanges) are driven by 5/8" simplex looped chain in a bracelet format along the length of the conveyor. These chains are fully guarded by the chain cover and end covers.
- The chain cover and end covers are formed in 3mm mild steel.
- Standard finish options are RAL7035 Light grey, RAL5010 Gentian Blue, RAL6011 Reseda Green - Alternative colours are available on request.

	LENGTH			
Width	**927**	**1442**	**1957**	**2987**
880				
1080				
1280				
1580				

Technical data

Max load/roller Up to 1280mm - 500kg
Max load/roller 1280 - 1580 - 360kg
Min top of roller height - 110mm

Pallet Conveyor - 182mm Pitch

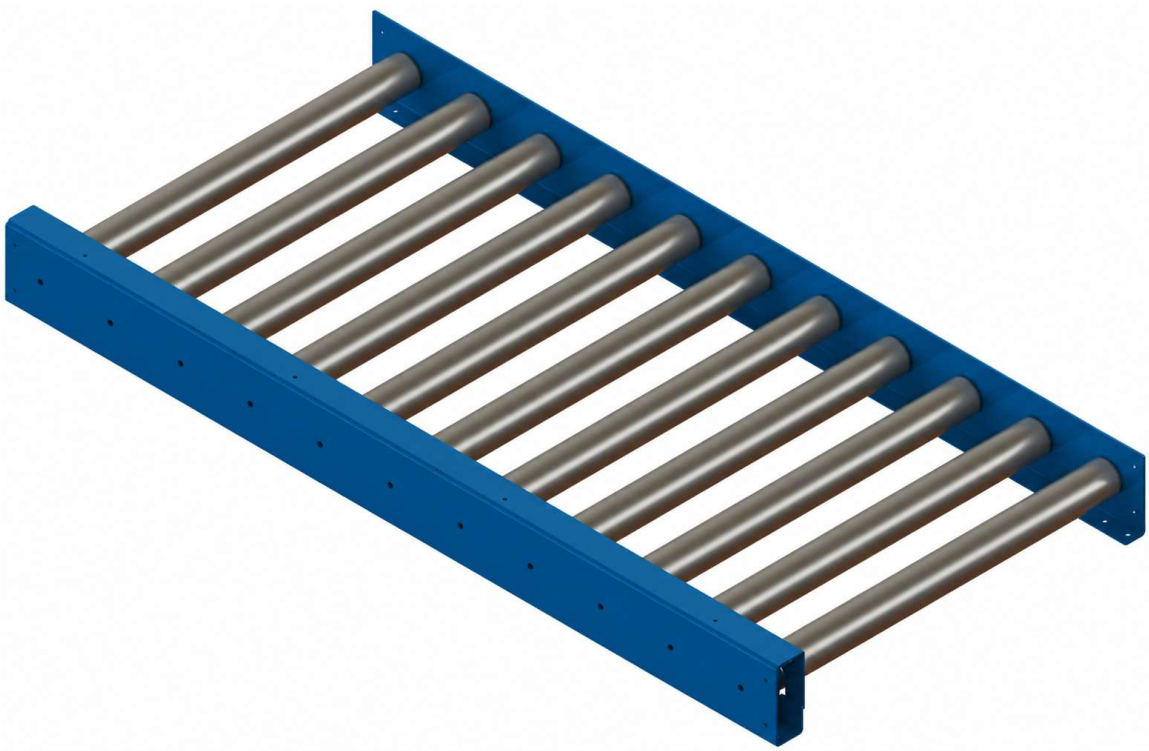

Product overview

- The conveyor side frames are formed in 5mm mild steel with the drive side 50mm above the roller, and the bearing side either 50mm above or 10mm below the rollers.
- Ø80 BZP rollers (also available in stainless and with flanges) are driven by 5/8" simplex looped chain in a bracelet format along the length of the conveyor. These chains are fully guarded by the chain cover and end covers.
- The chain cover and end covers are formed in 3mm mild steel.
- Standard finish options are RAL7035 Light grey, RAL5010 Gentian Blue, RAL6011 Reseda Green - Alternative colours are available on request.

	LENGTH			
Width	**910**	**1456**	**2002**	**2912**
880				
1080				
1280				
1580				

Technical data

Max load/roller Up to 1300mm - 500kg
Max load/roller 1280 - 1580 - 360kg
Min top of roller height - 110mm

Side Mounted Pallet Drive

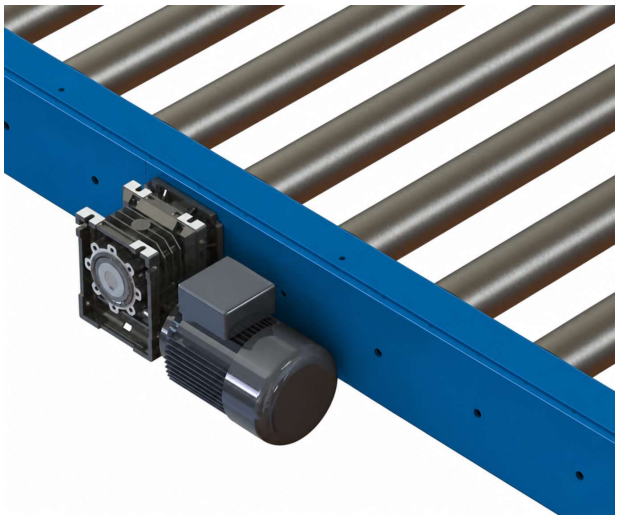

Transtecno - Side Mounted		
kW		Speed m/min
0.55		8.8
		11.8
		14
0.75		8.8
		11.8
		14

SEW - Side Mounted		
kW		Speed m/min
0.55		8.8
		11.8
		14
0.75		8.8
		11.8
		14

Brief description

- The motor is mounted directly to the 5mm drive side frame with a bearing mounted inside the bearing side frame.
- The side mounted motor is ideal for general runs of conveyor or when a low top of roller is required.

Technical data

Max conveyor length	12000mm
Min top of roller height	150mm
Max load with 0.55kW motor	3000kg
Max load with 0.75kW motor	4500kg

Underslung Pallet Drive

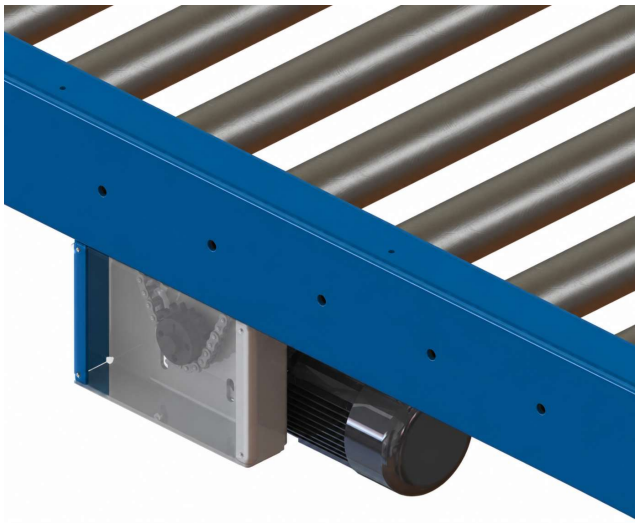

Transtecno - Underslung		
kW		Speed m/min
0.55		8.8
		11.8
		14
0.75		8.8
		11.8
		14

SEW - Underslung		
kW		Speed m/min
0.55		8.8
		11.8
		14
0.75		8.8
		11.8
		14

Brief description

- The motor is mounted underneath the conveyor rollers. The drive side frame is a fabrication of two folded parts which allows the drive to be lowered underneath the rollers.
- Maintenance access is provided to the drive sprocket by removing the drive cover.
- The underslung motor is predominantly used when there is limited space and smooth conveyor sides are required. Conveyor speeds can also be set more accurately by altering the size of the drive sprocket.

Technical data

Max conveyor length	12000mm
Min top of roller height	380mm
Max load with 0.55kW motor	3000kg
Max load with 0.75kW motor	4500kg

Pallet Support Legs

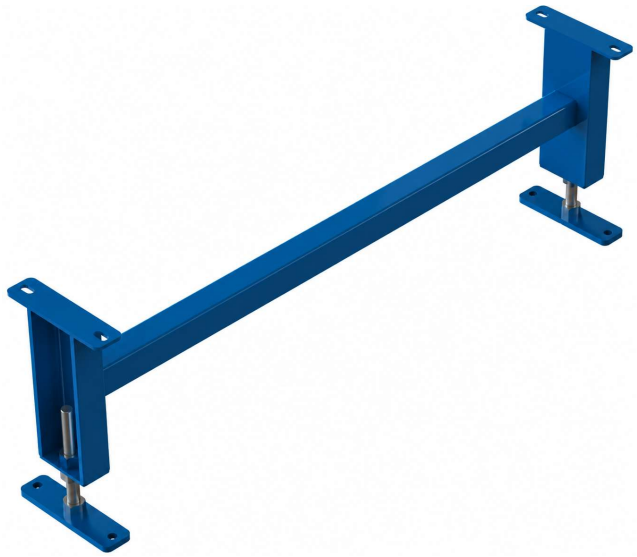

Product overview

- The pallet legs are a welded fabrication consisting of 100x50 Parallel Flanged mild steel channel with 5mm thick top and bottom plate and a 50x50 square hollow section cross brace.
- Standard finish options are RAL7035 Light grey, RAL5010 Gentian Blue, RAL6011 Reseda Green - Alternative colours are available on request.
- The pallet feet are a welded fabrication and manufactured from an M20x190mm long stud welded into a 10mm mild steel plate. The pallet feet are normally zinc plated.

	EFFECTIVE ROLLER WIDTH			
T.O.R height	**880**	**1080**	**1280**	**1580**
300				
400				
500				
600				
700				
800				
900				
1000				

Technical data

Max load/roller Up to 1300mm	4500kg
Height adjustment	+/- 30mm
Support spacing	1500mm
Support spacing below 300	360kg

Note: Above 700 TOR, diagonal cross braces between leg sets are required to increase stability.

Fork Lift Barrier

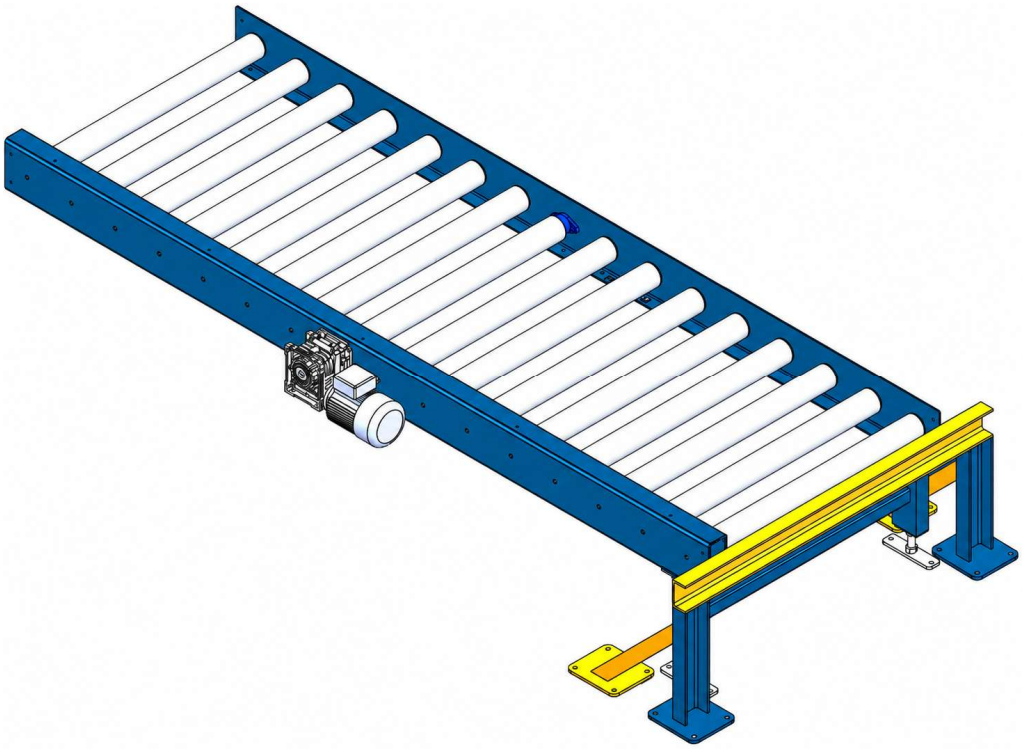

Product overview

- The forklift barriers are a welded fabrication consisting of 100x50 parallel flanged channel and 10mm thick bottom plate to secure to the floor using M12 through bolts.
- The forklift barriers are designed to prevent any damage to the infeed and out feed sections of pallet conveyor sections and rollers when loading or offloading pallets with a forklift truck.
- Standard paint colour is RAL1003 signal yellow – other colours are available.

	EFFECTIVE ROLLER WIDTH			
T.O.R Height	880	1080	1280	1580
300				
400				
500				
600				
700				
800				
900				
1000				

Technical data

Height	Top of barrier set 10mm above T.O.R
Floor fixings	M12 through bolts

Fork Lift Wheel Stop

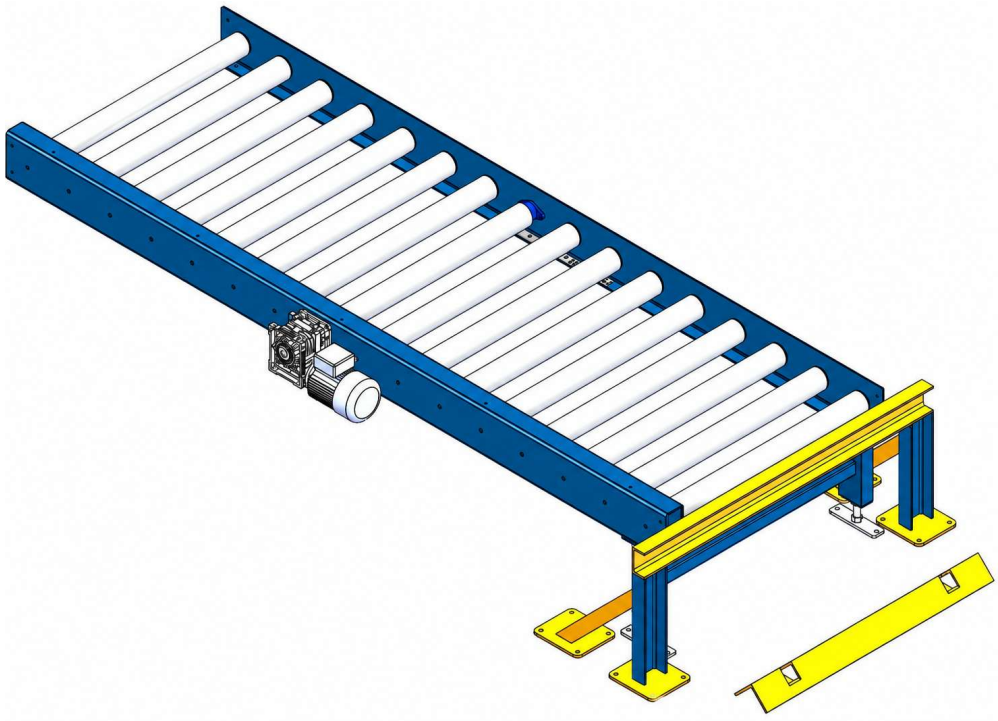

Product overview

- The forklift wheel stops are designed to prevent the forklift truck running into the forklift barriers at the end of the pallet conveyor when loading / unloading.
- The forklift wheel stop is fabricated from 100x100x8 RSA and 10mm thick laser-cut plates.
- The standard paint colour is RAL1003 signal yellow –other paint colours are available on request.

Width (mm)	880	1080	1280	1580

Lay Down Guides

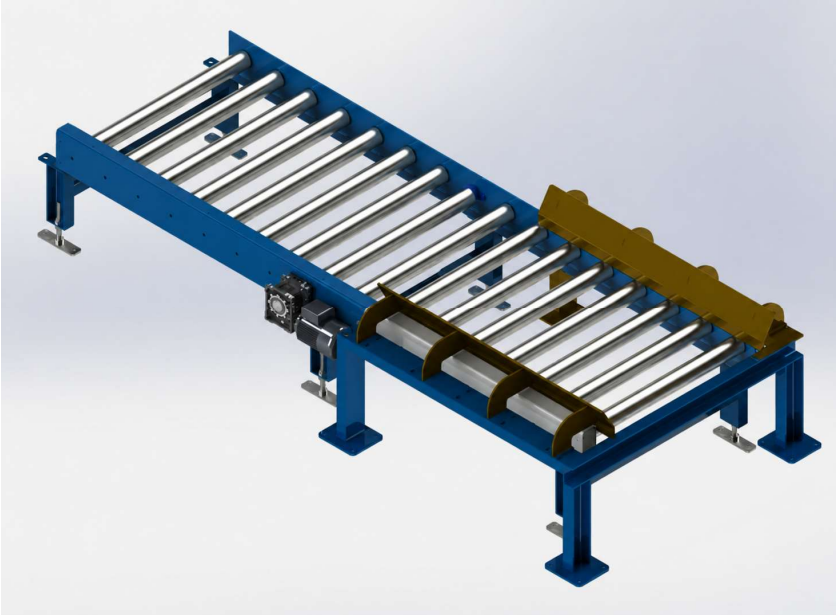

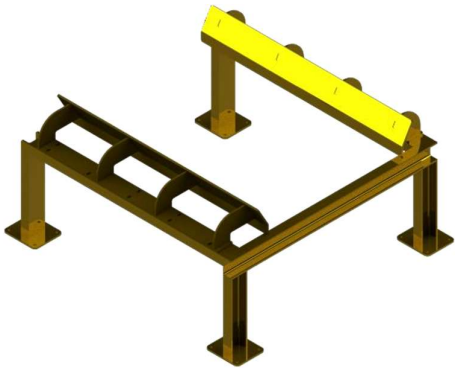

Product overview

- Pallet lay down guides are designed to prevent any damage to the infeed side frames of the pallet conveyor when loading with a forklift truck and to help guide the pallet onto the rollers centrally.
- The pallet lay down guide base frame is constructed of 100x50 Parallel Flanged Channel and 10mm thick base plates to bolt to the floor.
- The guides which mount over the top of the roller bed sides and bolt to the base frame are fabricated from 10mm thick laser-cut plates.
- Standard paint colour is RAL 1003 signal yellow – other colours are available.

	TOP OF ROLLER HEIGHT							
WIDTH	**300**	**400**	**500**	**600**	**700**	**800**	**900**	**1000**
880								
1080								
1280								
1580								

Un-guarded Turntable

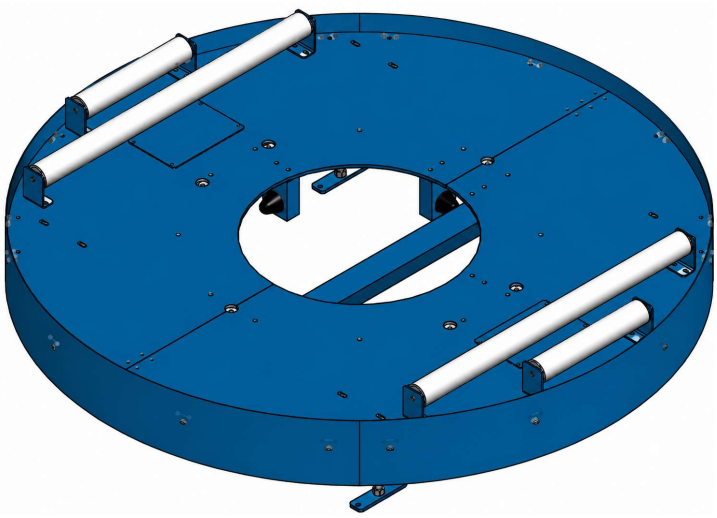

Product overview

- The turntable is designed to change the direction of travel of the pallet while keeping the pallet runners in the same orientation to the conveyor.
- Guarding requirements must be assessed for the complete installation.
- Standard finish options are RAL7035 Light grey, RAL5010 Gentian Blue, RAL6011 Reseda Green - Alternative colours are available on request.

Technical data

Max load	1500kg
Min top of roller height	400mm
Max conveyor width	1280mm
Rotation	360°
External diameter	2010mm

Top conveyor supplied separately – conveyor on top may require a braked motor.

0.37kW Transtecno Motor Options		
kW		**Rotation Speeds (RPM)**
0.37 Standard		2
		4
0.37 Braked		2
		4

0.37kW SEW Motor Options		
kW		**Rotation Speeds (RPM)**
0.37 Standard		2
		4
0.37 Braked		2
		4

Fully Guarded Turntable

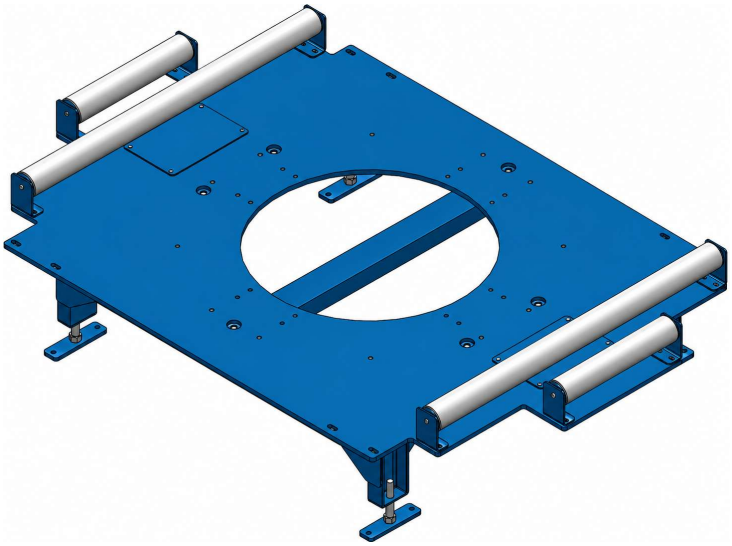

Product overview

- The turntable is designed to change the direction of travel of the pallet while keeping the pallet runners in the same orientation to the conveyor.
- Guarding requirements must be assessed for the complete installation.
- Standard finish options are RAL7035 Light grey, RAL5010 Gentian Blue, RAL6011 Reseda Green - Alternative colours are available on request.

Technical data

Max load	1500kg
Min top of roller height	400mm
Max conveyor width	1280mm
Rotation	360°
External diameter	2010mm

Top conveyor supplied separately – conveyor on top may require a braked motor.

0.37kW Transtecno Motor		
kW		**Rotation Speeds (RPM)**
0.37 Standard		2
		4
0.37 Braked		2
		4

0.37kW SEW Motor		
kW		**Rotation Speeds (RPM)**
0.37 Standard		2
		4
0.37 Braked		2
		4

Pallet Conveyor Stops

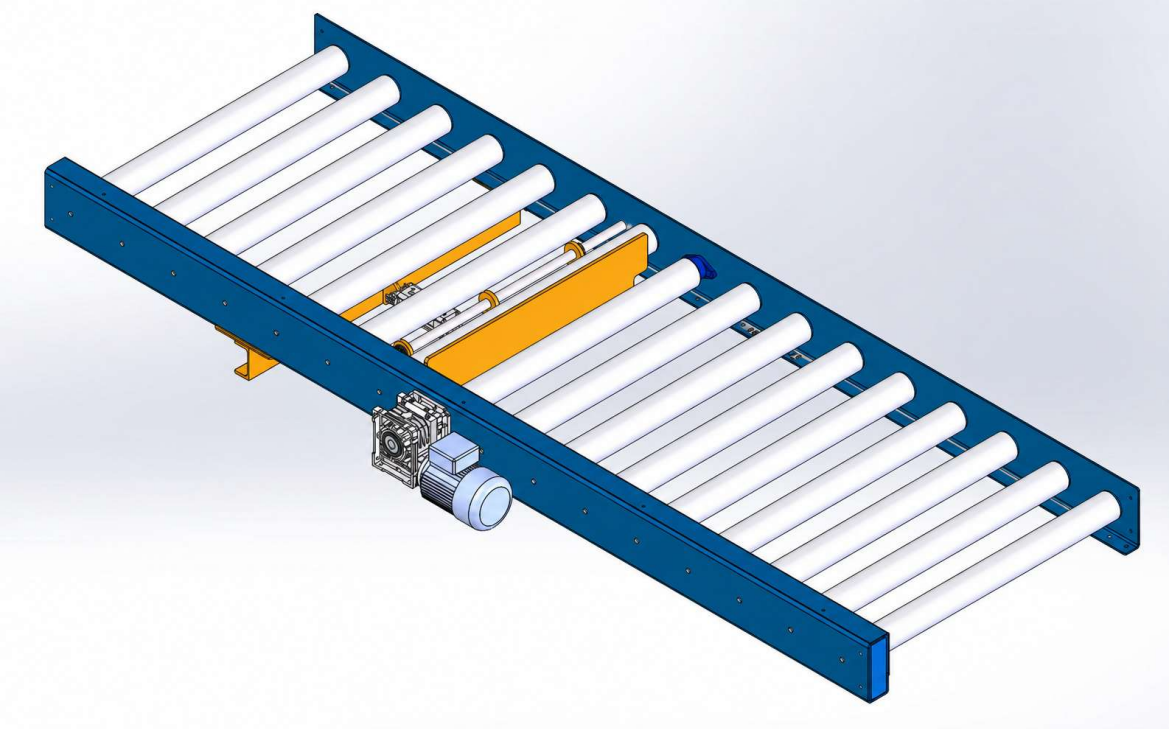

Product overview

- The pallet conveyor stop is designed to fit between the rollers and rotate up into a stop position.
- The stop is designed to rotate away from the product/pallet when being lowered thus reducing the force required to lower it.
- Standard paint colour is RAL1003 signal yellow – other colours available on request.

Technical data

- Height above rollers 50mm
- Stop Cylinder 50mm Bore by 50mm Stroke
- Stop Force 1200N

	EFFECTIVE ROLLER WIDTH			
Pneumatics	**880**	**1080**	**1280**	**1580**
Metalwork				
Festo				
SMC				

Pallet Position Clamp

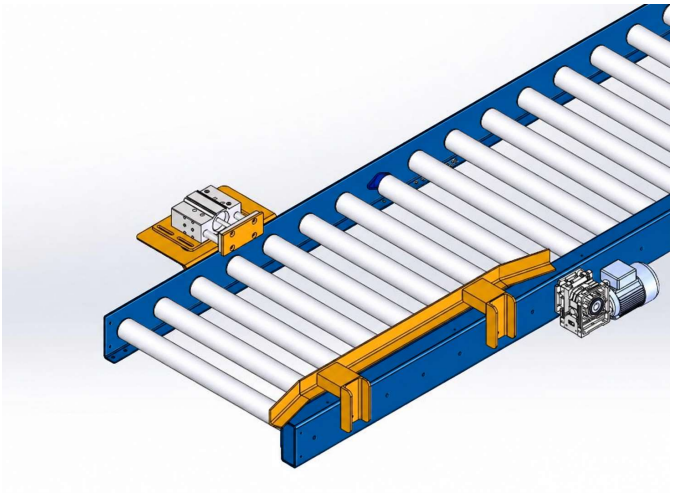

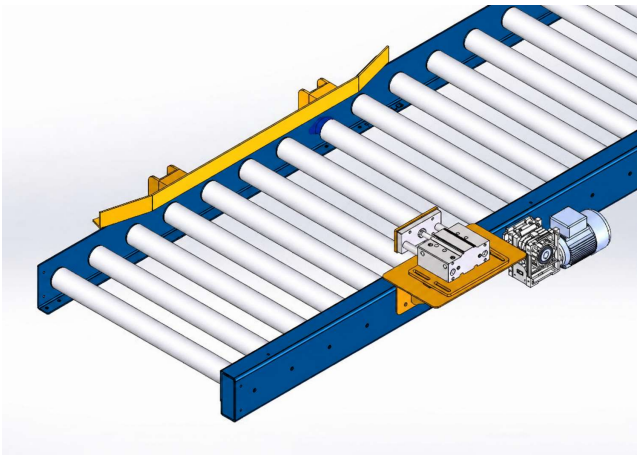

Product overview

- The pallet positioning clamp is used to clamp empty pallets when placing objects onto them when requiring an accurate position (usually used in conjunction with a pallet stop).
- Standard paint colour is RAL1003 signal yellow – other colours available on request.

Technical data

- Height above rollers 55mm
- Stop Cylinder 80mm Bore by 75/80mm Stroke
- Stop Force 3000N @ 6 bar

Pneumatics	MetalWork	Festo	SMC

Gravity Conveyors – 103mm Pitch

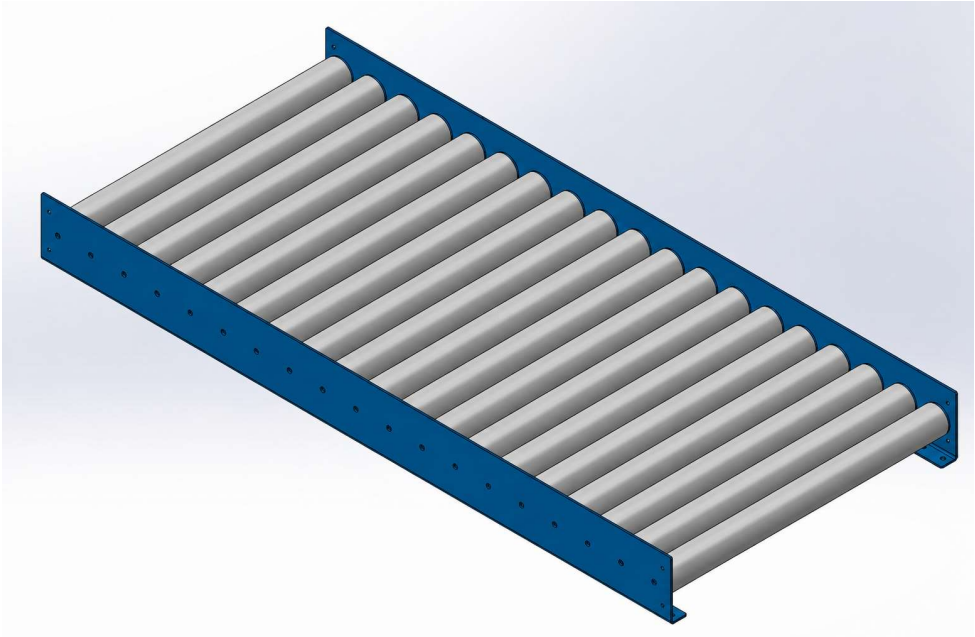

Product overview

- The conveyor side frames are laser cut and folded in 5mm mild steel plate and can be either 50mm above or 10mm below the top of rollers.
- Ø80 BZP rollers are typically used – stainless steel rollers or rollers with flanges are available.
- Standard finish options are RAL7035 Light grey, RAL5010 Gentian Blue, RAL6011 Reseda Green - Alternative colours are available on request.

Technical data

- Max load/roller Up to 1280mm - 500kg
- Max load/roller 1280 - 1580 - 360kg
- Min top of roller height - 110mm

	LENGTH			
Width	**927**	**1442**	**1957**	**2987**
880				
1080				
1280				
1580				

Gravity Conveyors – 182mm Pitch

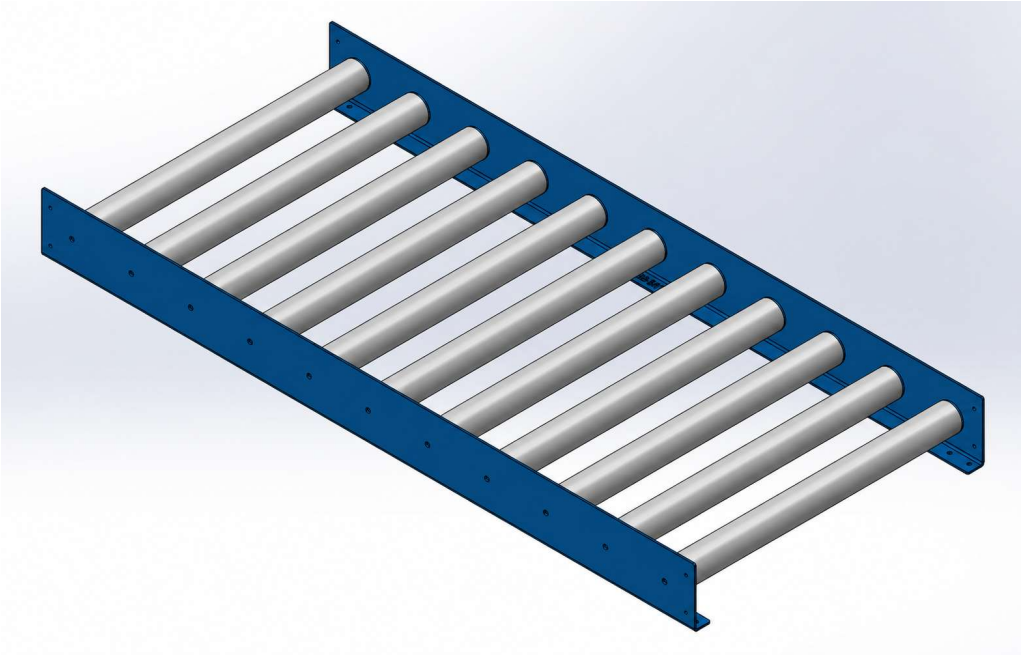

Product overview

- The conveyor side frames are laser cut and folded in 5mm mild steel plate and can be either 50mm above or 10mm below the top of rollers.
- Ø80 BZP rollers are typically used – stainless steel rollers or rollers with flanges are available.
- Standard finish options are RAL7035 Light grey, RAL5010 Gentian Blue, RAL6011 Reseda Green - Alternative colours are available on request.

Technical data

- Max load/roller Up to 1280mm - 500kg
- Max load/roller 1280 - 1580 - 360kg
- Min top of roller height - 110mm

	LENGTH			
Width	**910**	**1456**	**2002**	**2912**
880				
1080				
1280				
1580				

Two Strand Chain Conveyor

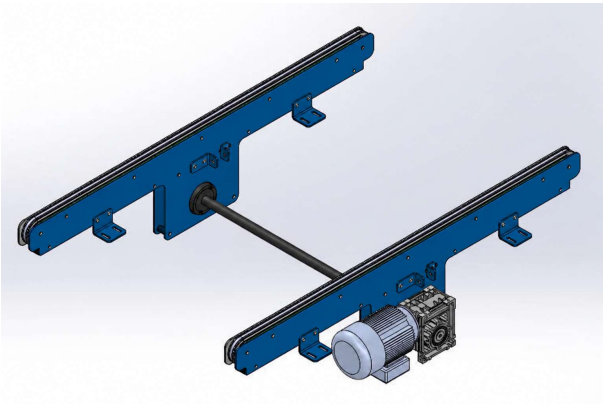

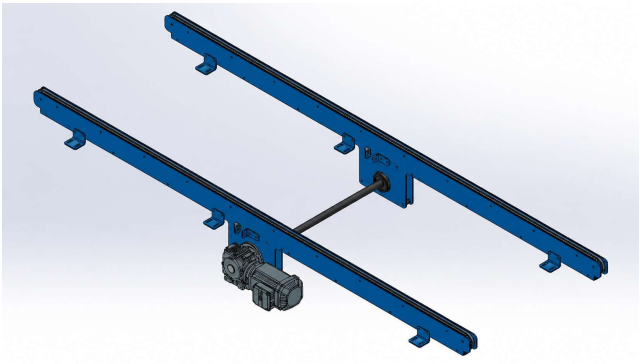

Product overview

- The two strand chain conveyor is constructed from laser cut 5mm thick side plates and UHMWPE chain guide strips.
- The pallets are moved using a ¾" pitch simplex chain.
- The two strand chain conveyor has two chain assemblies, positioned at 900mm centres (other centres can be designed to suit alternative pallet sizes)
- Standard lengths are 1500mm & 3000mm. Alternative lengths are available (dimensions and pricing on request)
- Standard finish options are RAL7035 Light grey, RAL5010 Gentian Blue, RAL6011 Reseda Green - Alternative colours are available on request.

Technical data

- Max load on two strand chain conveyor – 2500kg
- Min top of chain height – 400mm

	LENGTH	
MOTOR TYPE	**1500**	**3000**
TRANSTECNO		
SEW		